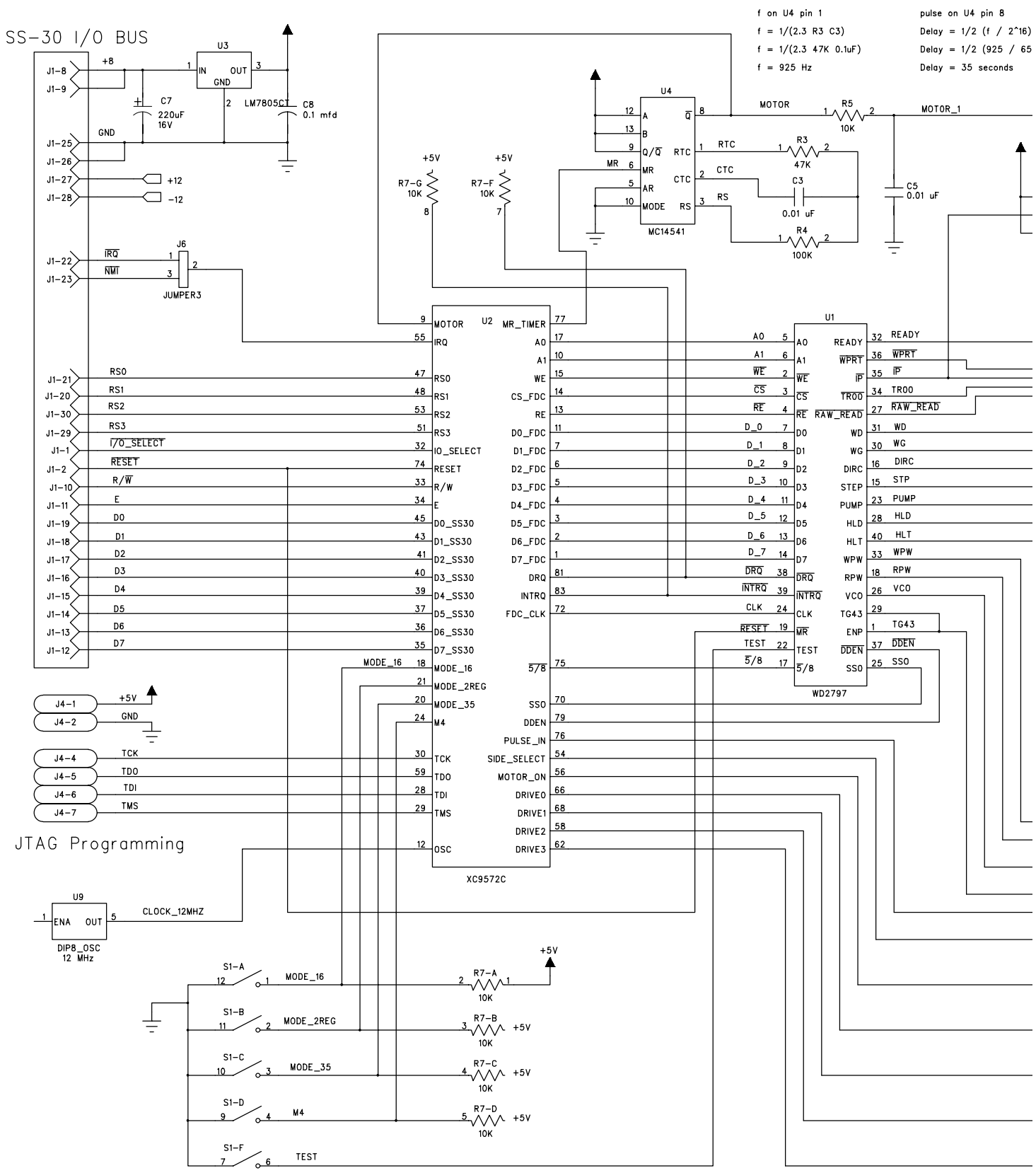
SS-30 I/O BUS
f on U4 pin 1
f = 1/(2.3 R3 C3)
f = 1/(2.3 47K 0.1uF)
f = 925 Hz
pulse on U4 pin 8
Delay = 1/2 (f / 2^16)
Delay = 1/2 (925 / 65
Delay = 35 seconds
U3
LM7805CT
C7 220uF 16V
C8 0.1 mfd
U4
MC14541
R5 10K
R3 47K
C3 0.01 uF
R4 100K
C5 0.01 uF
R7-G 10K
R7-F 10K
J6
JUMPER3
U2
XC9572C
U1
WD2797
JTAG Programming
U9
DIP8_OSC 12 MHz
CLOCK_12MHZ
S1-A
S1-B
S1-C
S1-D
S1-F
R7-A 10K
R7-B 10K
R7-C 10K
R7-D 10K